Bond University
ePublications@bond

Information Technology papers | Faculty of Business

5-1-2010

The next generation demand network in quick response systems: Intelligent products, packet switching and dynamic information

Jeffrey Barker
Bond University, Jeffrey_Barker@bond.edu.au

Gavin Finnie
Bond University, Gavin_Finnie@bond.edu.au

Follow this and additional works at: http://epublications.bond.edu.au/infotech_pubs

Part of the Databases and Information Systems Commons

Recommended Citation

Barker, Jeffrey and Finnie, Gavin, "The next generation demand network in quick response systems: Intelligent products, packet switching and dynamic information" (2010). *Information Technology papers.* Paper 91.
http://epublications.bond.edu.au/infotech_pubs/91

This Book Chapter is brought to you by the Faculty of Business at ePublications@bond. It has been accepted for inclusion in Information Technology papers by an authorized administrator of ePublications@bond. For more information, please contact Bond University's Repository Coordinator.

School of Information Technology

Information Technology papers

Bond University *Year* 2010

The next generation demand network in quick response systems: Intelligent products, packet switching and dynamic information

Jeffrey Barker* Gavin Finnie†

*Bond University, Jeffrey_Barker@bond.edu.au

†Bond University, Gavin_Finnie@bond.edu.au

This paper is posted at ePublications@bond.

http://epublications.bond.edu.au/infotech_pubs/91

THE NEXT GENERATION DEMAND NETWORK IN QUICK RESPONSE SYSTEMS: INTELLIGENT PRODUCTS, PACKET SWITCHING AND DYNAMIC INFORMATION.

Jeff Barker and Gavin Finnie

School of Information Technology, Bond University, Gold Coast, Queensland, Australia, 4229.

Abstract

This chapter discusses several innovations in information and communication technology and develops their potential to radically alter our view of the supply chain in quick response applications. Using the packet-switching framework as an analogy, it explores the way in which intelligent products may operate to dynamically adjust to market volatility. The changes will require new thinking in areas such as supply chain optimization and the handling of services in the supply chain or demand network. The main contribution here is to extend the research framework for dynamic information management for quick response networks.

Keywords: Supply Chain; Packet Switching; Intelligent Product; Quick Response System; Demand network; RFID; Packet Switching; Lead time; Delivery time; Information Generation 3.

1 Introduction

The concept of a quick response system cannot be easily separated from those of efficient consumer/customer response systems (ECR), agile systems or other variations on the theme. The Council of Supply Chain Management Professionals (CSCMP) definition of Quick Response (QR) is "A strategy widely adopted by general merchandise and soft lines retailers and manufacturers to reduce retail out-of-stocks, forced markdowns and operating expenses. These goals are accomplished through shipping accuracy and reduced response time. QR is a partnership strategy in which suppliers and retailers work together to respond more rapidly to the consumer by sharing point-of-sale scan data, enabling both to forecast replenishment needs" (Supply Chain Management Terms and Glossary 2009). Although originating in the apparel industry, the QR concept appears to have broader implications than just this field. Efficient Consumer Response, although focused more on the grocery sector, is characterised as "a process that tightly integrates demand management, production scheduling, and inventory deployment to allow

the company to better utilize information, production resources, and inventory (Weeks and Crawford 1994).

Christopher and Towill (2008) describe agility as a supply chain philosophy with six dimensions: marketing, production, design, organization, management and people. They define agility as "a business-wide capability that embraces organisational structures, information systems, logistics process and in particular, mindsets". The common theme across QR, agile and ECR is the effective rapid sharing of information using information and communication technology to deal efficiently with market volatility.

Rapid changes in technology allow industry to continuously adapt its view of "traditional" ways of doing things. Given the major financial return of effective supply/demand chain management for quick response to market changes, this is an obvious target for the use of new technologies. However this is an area in which these technologies have radically changed the way in which we view the management of the flow of materials and information from the raw material supplier to the final customer. Although the traditional term is "supply chain" the move to provide more customer focus refers to these as demand driven supply chains, demand-driven value chains, demand chains or demand networks (Almirall et al. 2003). The principle here is that customer demand should be fuelling the need for supply fulfilment. As discussed below most demand "chains" are not linear relationships and this chapter will generally use the term demand network rather than supply chain.

RFID (radio frequency identification) and intelligent products, supply/demand networks, multi-agent systems and information generation three (IG3) type technologies provide an opportunity to review the concepts supporting the traditional view of the demand chain. Most present day systems, including the current barcode systems, are still operating within the realms of information generation two (IG2). (The IG2 and IG3 terms are further developed below). Most current assessment of the implications of RFID in demand networks seem to deal primarily with low cost passive tags. The economics of basic RFID versus barcodes does not in many cases appear to justify the investment (e.g. Tellkamp 2006). Any effective use of RFID must add value to the process and one way to do this is not only to improve the visibility of information (the current approach and available via using bar codes) but also to improve the processing and the location of that processing i.e. by adding some enhanced capability to the RFID component.

The dynamics of information has undergone a significant transition. "Information now is global rather than local and dynamic rather than static" (Barker et al. 2004). Current barcode systems are only able to provide "semi-dynamic" information to enterprise systems as information can only be obtained at limited, designated segments in the demand chain. There is an information deficiency at many stations in the demand chain due to the lack of visibility and ability to capture real-time information. This creates bottlenecks and places various limitations on the efficiency and effectiveness of managing these demand networks, obviously putting constraints on the ability for rapid response.

An interesting intermediate technology to extend the capability of barcodes is the emergence of the 2D or matrix barcode. With a two-dimensional structure these barcodes can store significantly more information (up to 2 KB at present) and can include redundancy and error-correction capability. One interesting application which opens up the dynamic capability of these codes is the embedding of URL information in the code which can be detected from a mobile phone camera and used to link a WAP phone directly to the information source. However, the information source (the data matrix) is still static information with any active processing being performed elsewhere.

RFID technology and silent commerce offer the possibility of providing enterprise systems with truly dynamic information throughout the demand chain/network. The silent commerce concept was introduced by Accenture to describe the use of wireless, tagging and sensor technologies to make objects intelligent and interactive. Combining this with the internet enables new ways of gathering data and delivering services without human interaction. Real-time information can be captured throughout the entire global demand chain irrespective of its scale and complexity. However, current RFID applications tend to remain focused on an IG2 perspective of information and the view that RFID tags provide little more than replacement for barcodes. The emphasis has been placed on lowering the costs of passive tags with limited storage capability – in fact little more than is available on a bar code. The marriage of the "smart chip" (i.e. incorporating processing capability) and RFID technology occurring in parallel in applications such as the Octopus card has not rated much consideration in the demand chain.

This chapter will explore some of the potential provided by linking "intelligence" (or smart technology) to RFID capability in the demand network. Although the idea has attracted some interest, it has not been developed to any significant extent in supply chains despite the potential for significant financial return in certain applications. The concept has however attracted some attention in manufacturing (see e.g. Meyer et al. 2009). The technology enables us to consider the concept of the intelligent product i.e. a product that carries with it some processing capacity and memory. The relationship between lead times and demand times in any supply/demand network defines the constraints under which the network operates and the way in which technologies like RFID can contribute to improving the efficiency and effectiveness of the network. The packet switching paradigm will be discussed as a construct for reviewing the way demand networks operate. The foundation of a QR system is rapid and effective information visibility and the packet switching view provides the vision of dynamic information and the capacity to speed up delivery and order fulfillment, even to the point of dynamic rerouting of products as needed.

2 The Role of Lead Times and Delivery Times in Demand Networks.

The need to supply any product or service is defined by the demand for that product. A considerable amount of the research in supply chains/demand networks relates to establishing the estimated or forecast demand. In fact, a fundamental premise of movements like QR is that known demand can be rapidly communicated to the supply partners. However, the constraints on manufacturing any product are based on the lead times for the components of that product. It is in fact somewhat surprising that so little attention is paid in research to lead times and delivery times and the effects these times will have on the companies in a demand network. This section develops some of background of these key issues which will be addressed later in the chapter.

For the following, assume that the supply chain is a simple linear supply chain with every company having only one supplier and one customer as shown in figure 1.

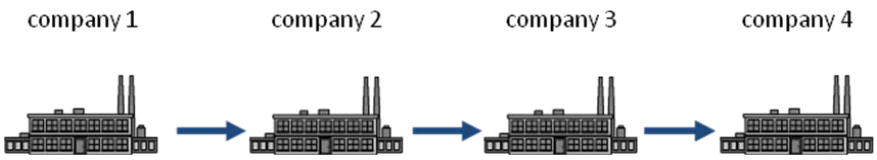

Figure 1: Simple Supply Chain.

Let:

l be the manufacturing lead time of a product

d be the acceptable delivery time of the same product. It is important to note that delivery time is the customer expectation of what the delivery should be, not the physical constraints on moving the product from one location to another. The latter is incorporated as a component of the lead time. It could possibly better be defined as "expected" delivery time.

The lead time l is the manufacturing lead time within one company in the demand network. It does *not* include the suppliers' lead times (for any necessary raw materials). The delivery time d is effectively driven by the demand and is set by the market, not the supply chain. The relationship

$$l:d \tag{1}$$

is crucially important and very often overlooked.

The following usually determine the necessity or otherwise of forecasting within a company:

$$l \leq d, \text{ forecasting is not required} \tag{2}$$

$$l > d, \text{ forecasting is required} \tag{3}$$

As an example; if it takes only 1 week to make the product (l=1) and the delivery time is 2 weeks (d=2), then no forecasting is required. Consequently, the product can be "engineered-to-order" (ETO) or "made-to-order" (MTO). If, however, it takes 6 weeks to make a product (i.e. l=6) but the market will only accept a delivery time of 3 weeks (d=3), then forecasting is required. Typically, such products are "made-to-stock" (MTS) or "assembled-to-order" (ATO).

Shingo (1981) used the terms production lead time (P) for l and delivery lead time (D) for d. Based on the P:D ratio, Wikner and Rudberg (2005) proposed which manufacturing strategy should be used.

The lead time l can be made smaller by:

- reducing set-up times, move times, run times and/or clean-down times,
- expanding capacity via
    - purchasing extra machines,
    - improving manufacturing efficiency,
    - purchasing newer machines,
- simplifying product design,
- using different materials,
- etc.

Now consider all the companies in this simple supply chain. For the purposes of the following analysis, it is assumed that the manufacturing (demand) network is linear, i.e. each company in the chain has one supplier and one customer, except of course, for the company at the tail of the chain and the company at the head of the chain.

Assume:

n companies in simple supply chain, where $n \geq 2$,

- the initial upstream company is number *1*,
- final downstream company is number n,
- the companies in between (if any) are numbered sequentially from 2 to n-*1*, for n>2.

Note that within this supply chain, companies may be using ETO, MTO, ATO and MTS. Regardless of which manufacturing strategy or strategies companies in the chain use, each company will have a resultant lead time which includes any decoupling point locations in the chain (see Sharman 1984; Hoekstra and Romme 1992; Orthager 2003; Rudberg and Wikner 2004).

Then the lead time and delivery time of company i is $l(i)$ and $d(i)$ respectively. Therefore, the *total* lead time for the whole manufacturing chain is the sum of each company's lead time:

$$L = l(1) + l(2) + \ldots + l(n) = \sum l(i) \quad \text{for } i = 1 \text{ to } n \tag{4}$$

and the *total* delivery time is:

$$D = d(1) + d(2) + \ ... \ + l(n)$$

$$= \sum d(i) \ \ for\ i = 1\ to\ n \qquad (5)$$

Therefore, the lead time to delivery time comparison (*l:d* above) becomes, for the manufacturing chain:

$$L{:}D \qquad (6)$$

However, we hypothesise the final customer is only prepared to wait *d(n)* time units. Hence, the comparison L:D is replaced with:

$$L{:}d(n) \qquad (7)$$

which is somewhat different to equation (6). L is, of course, the total lead time of say company 4 which is its own manufacturing lead time, *l(4)*, plus the suppliers lead times, *l(1) + l(2) + l(3)*. QR is addressing the constraints placed on the demand network due to equation (7).

It is important to also realise that neither *l* nor *d* is fixed. Unless all demand is specifically MTO, it must be assumed that demand will change. This will be discussed in further detail below. The *l:d* ratio contributes towards the categorisation of Lean Supply or Agile Supply as given in Christopher et al. (2008).

However, the supply chain is not as simple as that given in figure 1. An entity in the chain (a factory or distributor) may have many suppliers and many customers as depicted in figure 2. Each supplier and customer may, in turn, also have many potential suppliers and customers creating a network rather than a chain. Note that for *x* suppliers, the lead time to company *i* is now the maximum lead time from the *x* suppliers.

Figure 2 shows the network as seen by company *i* which has three suppliers and three customers. Each of its suppliers has suppliers and each of its customers has customers.

What are not shown in figure 2 are the other customers of company *i*'s suppliers and the other suppliers of company *i*'s customers. Figure 3 includes these. Silisque et al (2003) noted that supply chains will develop into networks that adapt to consumer demand in almost real time hence the term "demand networks".

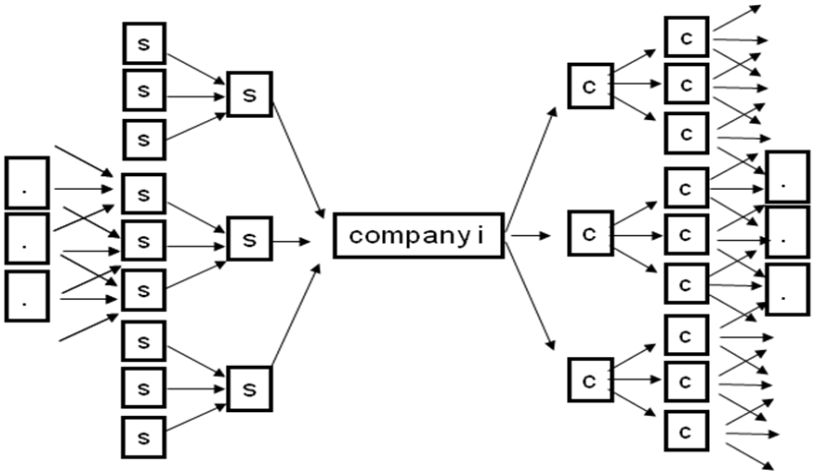

Figure 2: Suppliers Have Suppliers And Customers Have Customers.

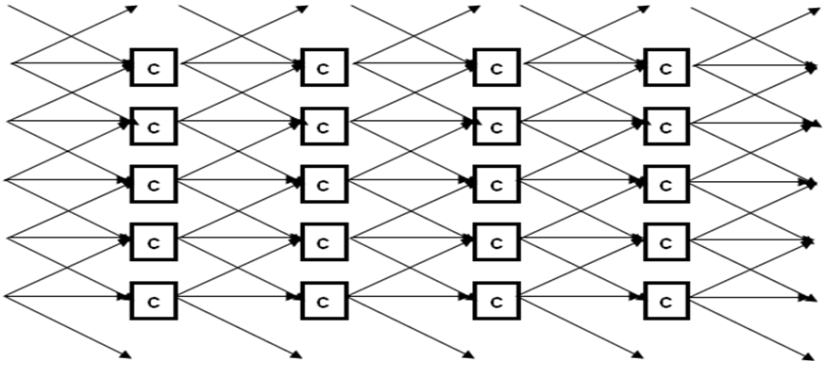

Figure 3: Demand Network.

3 RFID in Demand networks

In demand networks, an RFID device is a radio frequency identification tag that is attached to a physical item. Detailed coverage of the history and applications of RFIDs is given in Schuster et al. (2007).

The tag data needs to be converted to information and be made available to various information systems e.g. Transaction Management Systems (TMS), Warehouse Management Systems (WMS), Advanced Planning and Scheduling (APS) systems, etc. Since the system is global, certain standards and processes need to be introduced. These standards, developed at MIT, include the following:

- EPC (electronic product code), a simple serial numbering data system to identify the item
- PML, a physical markup language based on XML to describe the item which effectively converts the EPC data to useful information
- ONS (object naming service), a mapping technique to link the EPC and PML
- Savant, data handling software.

More detail on the standards can be found at the auto-id laboratories website (www.autoidlabs.org). The reader captures the EPC data from the RFID tag and relevant environmental and location information. It interacts with the Savant, which uses the ONS to retrieve information on the item. The accumulated information is then written to corporate databases using PML. By strategically placing readers in the supply chain, an item can be identified and traced locally. Due to the weak strength of the signal, this cannot be done globally. Further, the current cost of RFIDs has limited their use to items based on appropriate size or value. Items that do not satisfy these criteria are identified and located with a packaging unit such as a carton, a palette, etc. Applications of RFID in supply/demand networks include identity, track and trace, theft prevention, expiration dates for food and pharmaceuticals, counterfeit prevention and security. Bardaki et al. (2007) describe eight RFID-enabled supply chain collaboration services such as dynamic pricing and smart recall.

A common framework to assess the value of information technology (IT) is based on the view that IT creates business value via automational, informational and transformational effects. (Mooney et al. 1996). They define these as follows: “automational effects refer to the efficiency perspective of value deriving from the role of IT as a capital asset being substituted for labor. Within this dimension, value derives primarily from impacts such as productivity improvements, labor savings and cost reductions. Informational effects emerge primarily from IT's capacity to collect, store, process, and disseminate information. Following these effects, value accrues from improved decision quality, employee empowerment, decreased use of resources, enhanced organizational effectiveness, and better quality. Third, transformational effects refer to the value deriving from IT's ability to facilitate and support process innovation and transformation. The business value associated with these effects will be manifested as reduced cycle times, improved responsiveness, downsizing, and service and product enhancement as a result of reengineered processes and redesigned organizational structures.”

The PhD research by Tellkamp (2006) focused on the impact of low cost passive tags and showed that in many cases the use of RFID purely as an identification device offered little if any economic benefit over the use of bar codes. In particular the informational gains did not appear to justify the expenditure in readers and tags as the basic POS (point of sale) data was already available. However our view in this chapter is that the major gains which are likely to appear in the longer

term from RFID technology will be primarily transformational. Although the provision of better quality information can and probably will improve supply chain efficiency, the use of the technology to alter the way in which products and information flow is likely to be the most significant gain in effectiveness. The capability of the technology to provide more than just identification and, in particular, the possibility of some local processing or enhanced information capability allows us to look at ways in which the product itself can contribute to the operation of the chain.

4 The Next Generation Demand Network and Quick Response Systems

In moving towards the effective utilization of new technologies in quick response demand networks, we can identify a number of key "change agents" that are driving the need to view demand networks differently. These include

- A new dynamic view of information which we have termed "information generation three or IG3"
- Global track and trace
- Intelligent products and local intelligence capability
- Multi-agent systems

4.1 Information Generation Three – IG3.

With the advent of the world-wide-web, the world has moved into an information age that is changing not only the way that we do business and commerce but also is changing our lifestyles. To help define this emerging environment, the following simple terminology and concepts are used. An Information Generation (IG) can be defined by the availability and general distribution of non-verbal information. Using this definition, there have been three 'information generations' to date; IG1, IG2 and IG3.

IG1 is the information generation that started with rock drawings and paintings, and progressed through hieroglyphics to written language on scrolls and handwritten manuscripts. IG2 started with the invention of the printing press, which was the first "machine" to become involved in the storing and distribution of information. The availability and accuracy of information grew by orders of magnitude resulting in the biggest increase in productivity to that time. IG3 started with the introduction of the world-wide-web ('the web') and owes its existence mainly to innovations in Information and Communication Technology (ICT). It again resulted in orders of magnitude increase in the accuracy and availability of information and associated knowledge.

In IG3, as soon as information is updated, it is virtually instantly and globally available through passive and active methods. Such information can be termed "dynamic" to differentiate it from the static information used in IG2. Physical de-

vices such as G, satellite navigation smart cards, RFIDs and cell phones gather dynamic information as and when required. Using smart phones and personal calendars, it is now possible to know where people are and where they plan to be. Various techniques and facilities such as intelligent agents, data-mining, knowledge engineering and many others, use dynamic information to add to knowledge and intelligence.

The business ecosystem (Moore 1997) is dynamic, volatile and complex in IG3. As stated by Watson (2007), "With globalization, environments for organisations, both business and world governments, are becoming more complex. The reason for this increased environmental complexity include 'the four V's, specifically:

- increased Volume (from local to global context in terms of transactions)
- increased Velocity (faster transactions between people)
- increased Volatility (organisations change and reorganize faster)
- increased concerns regarding Veracity (the truth is harder to distinguish) "

In IG3:

- the amount of information is orders of magnitude greater than in IG2
- "dynamic" information is replacing "static" information
- information access is much faster
- the information has become truly global
- information is more accessible
- in addition to information, processes can be exchanged
- different search parameters can be utilized
- visual communication is used more extensively
- intelligence and knowledge retention are replacing data and information retention.

This dynamic information and intelligence on things and people was not available in IG2 and was therefore not used in systems and methodologies designed and implemented in IG2. IG3 should be the foundation of modern quick response systems although much of the view of information currently employed in QR networks is from the IG2 era. Note that IG3 is not a system; it is the information environment we are progressively moving into.

4.2 Global track and trace

It is helpful to envisage a spectrum of devices to identify, locate and provide input on individual items. At one end of the spectrum used to provide dynamic in-

formation are GPS devices (the macro end), and at the other end of the spectrum are small RFID devices (the micro end). Other devices such as e-tags, sat-nav, smart cards, mobile phones, etc are positioned along the spectrum. All these devices supply dynamic information. Bar codes can also be included in the spectrum although they have limited locational dynamic information. It is possible to strategically place RFID readers so the global location of individual items with attached RFIDs is known.

As an example, assume that the cost of RFIDs is such that it is feasible to put them onto individual widgets. Each widget can then be traced locally at a warehouse, a manufacturing plant or a retail outlet as is done now to. It can then be packaged into a carton that will have a separate RFID. Current thought is that individual item RFIDs and packaging unit RFIDs may have different frequencies (Schuster et al. 2007). As the item is loaded onto the carton, the relevant data structures will be updated so that each individual widget knows which carton contains it and each carton knows what widgets it contains.

The process is repeated when cartons are packaged onto palettes. If an RFID reader is placed around a truck loading space, relevant data structures can then be updated so that the truck knows what palettes it's carrying and the palettes know which truck they are in. By reading the relevant data structures, the location of each widget (RFID), carton (RFID), palette (RFID) and truck (GPS) is known. This process can then continue when the palette is loaded off the truck and into a container (GPS), which has an RFID reader around its opening, for shipping the item to any global location. As is done now, the locations of the container and the truck are provided via GPS. Therefore, by strategically placing RFID readers, updating information system data structures, and using existing GPS devices and RFIDs, it is possible to locate an individual widget anywhere on the globe that has GPS coverage.

4.3 Intelligent Products

With each generation of RFID there is increasing capability and potential to include local processing capacity. Current RFID technology provides a range of solutions. Simple EPC codes such as EPC-64 and EPC-96 provide 64 and 96 bit data structures to identify static product information. At the other extreme there is the US DOD RF-Tag data Format that has a standard non-volatile memory of 128-256 bytes and extended memory of 128K bytes of battery backed RAM. The military 412 tag has 4096 bytes of EEPROM with additional space for a number of commodity records. Tags may be further divided into active and passive tags i.e. those that respond to a signal but have no local power source and those with battery power.

Much of the debate and commercial evaluation of RFID technology has been on cutting costs of passive RFID tags to make it competitive with bar code technology. In many cases the cost of the products being moved or the cost of a container load of product would make it worthwhile to consider more powerful devices. The DOD has taken this view with its increased storage capacity RF-Tags.

With the continuing fall in smart card costs the provision of intelligent RFID devices is financially viable for certain classes of product or product package.

The boundary between RFID tags, “Smart RFID” devices and “Smart Sensors” is becoming increasingly blurred, as is the place where specific computation occurs. The original RFID concept used RFID middleware and the Object Name Service (ONS) to identify and process particular EPC codes. This middleware provides messaging, routing and connectivity to backend ERP systems and databases. This middleware processing capability tended to be centralized. More recently, the idea of edge processing has been proposed to deal with the high volumes of data generated by RFID devices. Hanebeck (2006) claims that “intelligence and data processing capabilities should not be located in large-scale remote systems but rather need to be readily available at the edge of the network where the individual items, cartons and pallets live”. This “edgeware” deals with filtering, cleaning and eliminating redundant data before transmission to interfacing systems. The processing capability has moved to “smart RFID sensors” which can handle local activity.

“Smart sensors” (Culler and Mulder 2004) are a key component of the move towards pervasive and ubiquitous computing. Smart sensors incorporate both RFID capability and local processing capability and can form perceptive networks to monitor complex environments such as a factory.

Although the technology exists and there is a move to perform more local processing at key points in the demand chain, there does not appear to have been any significant move to providing intelligent or smart RFID sensors in demand chain applications. The question arises as to what benefit there can be in proving some autonomy for each product or pallet in the network. Shuster and Brock (2004) introduce the concept of “smart products” that “sense and respond with the physical world”. They consider that “smart objects within the consumer demand chain might dynamically change price based on sensing demand at retail stores”.

Karkainnen et al. (2003) also describe “intelligent products” as a potentially valuable tool in international projects where a large number of individualized deliveries need to be managed through a sizable demand network. Since the products and product delivery in such projects tend to be customized, the ability of products to actively participate in the demand network can significantly improve overall project productivity. In their HUT system, deliveries can communicate their identity and handling instructions directly to the information system. This information can be changed as conditions change. In the HUT system, each product is managed by a software agent which is external to the product. Wong et al. (2002), based on research at the Auto-ID centre at the University of Cambridge, also investigate the role of intelligent products in the demand chain. They define an intelligent product as having part or all of the following characteristics:

- Possesses a unique identity
- Is capable of communicating effectively with its environment
- Can retain or store data about itself
- Deploys a language to display its features, production requirements, etc.

- Is capable of participating in or making decisions relevant to its destiny.

Such products can negotiate resources via their software agents, adapt objectives based on updates from the environment, advise on adjusted picking schedules, etc. Intelligent products may be considered at the case or pallet level to make the option cost-effective.

Although the intelligent product was proposed at this stage, there appears to have been little follow-up in more recent work in supply chain management. However the idea has been further developed in manufacturing with the work on product-driven control systems. The Holonic Manufacturing Systems approach is predicated on the view that autonomous production units (holons) can work together to make products in a dynamically reconfigurable environment (e.g. Leitao and Restivo 2006). Product-driven control systems are "dealing with products whose information content is permanently bound to their material content and which are able to influence decisions made about them" (Pannequin et al. 2009). Allied with the holonic manufacturing systems approach based on intelligent agents, product-driven control offers the potential for increased flexibility and rapid adjustment to dynamic information to meet business demands (Haouzi et a., 2009; Gouyon and David 2008; Morel et al. 2003).

In this chapter, we extend this intra-organizational shop floor view to extra organizational supply networks. We consider the implication of intelligent products allied with a packet-switching view of the demand network. In particular, we consider the implications of embedding the intelligent agent capability in the RFID tag itself, rather than relying on an external agent to manage the product.

4.4 Multi-Agent Systems (MAS) in Demand Networks

There is a considerable body of research on the use of multi-agent systems on demand chain management and this section provides only some examples of the area. Autonomous software agents have been considered for multiple applications such as managing scheduling, procurement, negotiation, etc. There is in fact a competition (The Trading Agents Competition) that enables competitors to compare different agent strategies in a simulated supply chain environment (Aruncha-lam and Sadeh 2005). The MAS approach provides a useful programming paradigm for the provision of local intelligence by autonomous entities.

To provide a framework to consider MAS in supply chains, Ahn and Lee (2004) suggest that studies in agent-based supply chain management can be put into three categories: using the technology to improve the operational efficiency of supply chains, the use of dynamic information to improve network adaptability and efficiency and effective agent-based architectures for supply chain management. As examples in the first area, an agent based framework which simulates the supply chain with agents at each station was defined by Fox et al. (2000). Andrews et al. (2007) analysed the features that distinguished winning agents from losers in the TAC competition. Cao and Leggio (2008) showed that a multi-agent approach could reduce the bull-whip effect as opposed to conventional supply chain management approaches.

The discussion in the current chapter falls into the second category concerning the use of dynamic information. The paper by Ahn and Lee (2004) proposes an agent-based network where agents form dynamic information networks to coordinate production and order planning. Luh et al. (2003) have investigated a price-based approach for activity coordination using mathematical optimisation and the contract net protocol. The use of auctions to form optimal dynamic demand networks has been investigated by Kim and Segev (2003). Hanebeck and Raisanghani (2007) discuss the use of RFID technology as a supply chain coordination mechanism.

In the third category a large number of approaches to different architectures have been suggested. As an example, Sadeh et al. (2003) have worked on an agent-based decision support environment for dynamic supply chain management. In the system, called MASCOT, each agent uses a blackboard architecture for coordination and control and an agenda to drive activity. Finnie et al. (2004) have proposed a two-tier architecture of buyer/seller agents with buyer and seller coordinator agents. Nissen (2001) describes a design for agent federation where the agent activities are defined using a Petri-net based approach. Monteiro et al. (2007) describe an architecture based on "virtual enterprise nodes" to distribute decision making in a multi-site system where each VEN is implemented using two types of agent.

For the intelligent product as envisaged in this chapter, the intelligent agent approach provides a flexible programming methodology that suggests a distributed solution to controlling the demand network. It does not matter whether the agent is embedded at the individual product level or higher in the process e.g. in the "edgeware" or at the smart sensor level provided that the communications language and infrastructure are well defined.

5 Circuit Switching, Packet-Switching and Quick Response Systems

In the context of the IG3 concept and the role of RFID devices in dynamic information, this chapter considers how we could apply some packet switching concepts to "dynamic demand networks". This section defines and contrasts the concepts of circuit switching and packet switching, considers the impact of demand in quick response systems and the effect of lead times before looking at how a packet-switching view can change the way in which we consider demand networks.

5.1 Circuit Switching vs Packet-Switching

The term packet switching is a telecommunications term but it is used in this paper to describe the model for demand networks. Both circuit switching and packet switching are used for high-capacity network communications. In circuit switching networks, the connection is made between the sender and the receiver before the start of the communication and the "line" remains dedicated to that

connection until closed by the sender or receiver. In packet switching, the message is divided into packets that can each take a different path through the network from the source to the destination where the packets are then recompiled into the original message. Packet switching and circuit switching networks are used to exchange information. However, in this discussion, we are using the switching networks as models to exchange inventory in demand network management rather than information. The enterprises exchanging inventory in the demand network are equivalent to nodes in a switching network exchanging information.

The current view of the demand network can be seen to be equivalent to circuit switching where connections are made between the customer and a limited number of suppliers. In both the out-dated MRPII and JIT theories, customers are recommended to have only one supplier and to develop a very close relationship to that supplier. We are proposing that the circuit switching model was appropriate for SCM in IG2 as mainly only static information was available but given the dynamic information facilities in IG3, the packet switching model, with multiple suppliers rather than one source, for demand networks can and should be used in IG3.

5.2 The Impact of Demand in Quick response Systems

QR requires a high level of transparency and rapid availability of demand information. As products are sold, the information about that sale is recorded and made available to suppliers to plan production. Current approaches use scanners and barcodes and the use of RFID purely as a product information source will not add much (other than some possible information on product detail e.g. colour, etc). With the addition of features such as temperature sensing, the use of RFID in fast moving consumer goods (FCMG) chains for products like perishable goods begins to make more economic sense. However a key weakness in much of the assessment of agile and quick response systems is that demand, once known, is static. The demand for a product is itself dynamic information, with the actual volume and location of demand possibly changing between the point of estimate and time of delivery. The longer the time interval, the higher is the probability that some change will occur. Viewing demand as static information reduces the flexibility offered by new technologies. As discussed below, the ability to view the demand network as a packet-switching environment allows us to consider multiple sourcing and dynamic re-direction of products as needed. The details of the sale are fed as far back in the demand network as needed. Various points in the network may form decision points which will decide how to source (or multi-source) product (in the information flow) or how to reroute product (in the product flow) as needed.

As discussed earlier, the relationship between lead times and delivery times defines the constraints on meeting demand within a specified period. The total lead-time is the sum of each company's lead time and minimising the response time could depend on how effectively the lead-times can be reduced (where $l(i) > d(i)$).On the other hand, if $d(i) > l(i)$ where $d(i)$ is the expected quick response time, there is no need to work on reducing this delivery time. In either case, the

ability to partition and review the demand network components is enhanced by the intelligent packet-switched product view developed below.

5.3 Packet-Switching in the Demand Network

Christoper and Towill (2008) consider developing "market specific" supply chains and the concept of matching the pipeline to the product. They use the example of the Spanish fashion retailer Zara to show that quick response and agility is achieved by compressing the total pipeline. In Zara, raw materials are sourced from low cost off shore suppliers. Approximately 40% of garments with low volatility are imported as finished goods. The rest are produced by quick-response in Spain, using their own factories for economies of scale operations (e.g. dying, cutting, etc.) and a network of small contractors for labour-intensive finishing stages.

Instead of dealing with demand for a product as a single value, Zara is categorizing such demand into two; a longer term less volatile demand which can be serviced by cheaper overseas suppliers and a shorter term volatile demand which can be serviced by local more expensive suppliers.

The *d* for a product given in (1), has been broken up into components; in the Zara example, into 2 components:

$d = d_{st} + d_{lt}$ where st is for short term and lt is for longer term (8)

Thus Zara split its sourcing to matched suppliers with suitable lead times to d_{st} and d_{lt}, so the original *l:d* (1) was satisfied by:

$l_{lt}:d_{lt}$ and $l_{st}:d_{st}$ (9)

Splitting sourcing provides a possible source of competitive advantage for a range of companies. Ordering of components or material in advance of demand and assembling or manufacturing the final product locally to enable responsiveness satisfied the d_{st} requirements. In effect, Zara is compressing the total pipeline by effective balancing of lead and delivery times.

The packet switching view of materials in the demand network enables us to view material as composed of local packets with addressing and content information attached and dynamically accessible. Niederman et al. (2007:99) hold the view that trading communities will "move from a world of point-to-point relationships to massive collaboration".

Traditional packet switching has data packets arising from a single source and being reassembled at a single destination. Our packet switching view allied with the intelligent product concept allows us to consider multiple sourcing of materials and the ability to dynamically complete shipments as requirements change. The corollary with packets lies in viewing each chunk or packet of supply as an addressable unit that can be redirected as needed and reassembled at the destinations(s) as required. Instead of the traditional view of inventory tied to a specific supplier or warehouse, we can rather consider virtual inventory i.e. it exists

somewhere in the pipeline. This may be in transit or resident in a supplier warehouse. Its location, volume, etc can be determined dynamically. This is equivalent to Intel's view of "Inventory in Motion" where inventory is in the pipeline and products can be shipped before orders are received (Leach 2004). The demand network is self-adjusting in that inventory will be re-routed as demand appears. For certain materials, there are a range of potential suppliers and the type and quality of material is relatively consistent across suppliers. Dynamic information also suggests the ability to deal dynamically with excess inventory in the demand network. As a customer requires an order to be completed, it is feasible to consider the following scenario:

The customer seeks order fulfillment. The order can be split into the most efficient delivery patterns and directed to relevant locations. Priorities can be established based on criteria such as delivery history, other CRM type factors, etc. Each location can be queried for its potential to deal with the order. Once an order is completely assembled the component orders can be confirmed and initiated.

Dealing with products which require an agile response (e.g. local manufacture or assembly from components) could fit the packet switching concept. The ability to dynamically adapt the ordering process allows for rapid response to changing conditions e.g. if a shipment is delayed it can be replaced as needed by another order. Multiple sources of material can be considered and the most effective combination selected. The flexibility inherent in this approach allows both assemble-to-order and make-to-order to be dealt with. The inventory in the pipeline can if necessary be redirected elsewhere. Although human management of this type of situation is feasible but not practical in terms of the complexity, a multi-agent environment could deal with this complexity and optimize delivery rates. For situations where the lead time exceeds the delivery time the packet-switching view enables the supplier to identify any re-routing or alternative sourcing which may reduce lead-time for product development. If the constraint is delivery time based, redirection and the inventory in motion view could be used to reduce the delivery time. This concept is illustrated in Figure 4 which uses the cloud analogy to represent the flexibility of dynamic response to changing orders. Any one of company type C_1 can provide intelligent products of type IP_1 which are required by companies of type C_2. Companies C_2 produce products of type IP_2 which in this example are then supplied to customers.

It is possible to envision an environment in which products can act as agents with local processing capability and some autonomy. In keeping with the intelligent product concept discussed earlier, such a product would be capable of reporting its status and evaluating whether action needs to be taken. The processing model would be partially decentralized (based on a multi-agent system and smart sensors view) with some central control e.g. to coordinate actions between products. As an example, one could consider perishable goods or materials that may be subject to change during transit. If there is any delay a smart product could evaluate its status and report to the nearest sensor that action needs to be taken. This action may involve negotiating with another product elsewhere in the demand

network for redirection e.g. to a more convenient location. Any product with a use-by date e.g. a shipment of fruit may encounter some delivery delay or unusual conditions such as excessive heat. This shipment could be dynamically redirected to a more suitable destination. Another example is where a number of buyers may have need for a generic type of product such as PVC piping. Depending on current availability in the warehouse "cloud", intelligent products could negotiate to reach an optimal delivery schedule based on time, distance and dynamic demand.

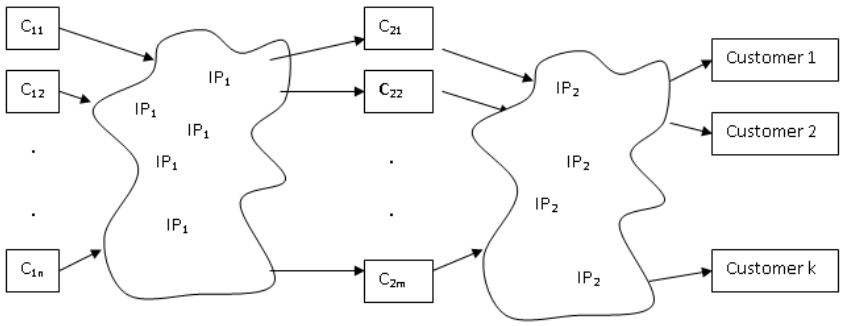

Figure 4: Demand Network with intelligent products IP_j and companies C_{ij}

Intelligent products provide an embodiment of the packet switching view of the demand chain. Each product with local processing capability can act as a packet with the capability of being redirected as needed and with the capacity to develop its own knowledge on its environment. Another scenario that could be considered would be to assist backroom visibility. A cluster of similar products could negotiate to decide which is the most sensible to go next i.e. to be moved to the retail shelves.

6. Discussion

The packet switching view of intelligent products is a new paradigm that suggests a wide range of opportunities for quick response environments. One can envision products that can be dynamically redirected as needs change or constraints develop. Complete product packages can be assembled for a number of product components that can be optimized for such factors as delivery time, cost, etc. Each product or product grouping (at case or pallet level) could have sufficient decision making logic to decide whether to participate in a delivery, negotiate with other products of the same category for sequencing, etc. The traditional view of the supply chain is that products (transactions) are buffered until required and much of supply chain optimization relates to issues of static buffer management. With intelligent products buffering may in effect act as redirection of products to the next destination. Further, such buffering will include any decoupling point analysis if

and where required. The demand-driven supply network must be seen as a dynamic structure, not a static structure as per current SCM theory. As in packet-switching communication networks, “packets” of inventory will be routed in real-time as demand dictates and as constrained by the effect of lead time.

With a new view of the demand network and products there is a need to redefine business processes to deal with this dynamic environment. Processes must be capable of quick response and adaptation as needed. The current processes were designed in IG2 for the IG2 supply chain. The service-oriented approach suggests one way of dealing with the issue.

Western economies are moving steadily towards a service based rather than a manufacturing based economy. The Economist Intelligence Unit (EIU 2006), in its Foresight 2020 report, notes “In the US employment in services industries is expected to increase from an already high rate of some 85% to well over 90% of total employment in the non- farm sector.” One area of research that is of interest to this chapter is how to deal with services in a dynamic demand network. Virtually all research to date in this area has focused on static supply chains with materials movement and inventory management.

Services have particular features of interest to demand networks i.e. they are perishable, cannot be buffered or stored and have tight constraints on their use. Traditional supply chain thinking tends to take a capacity limit view of products when trying to optimise utilisation of production capability. However, it can be shown that by taking a constraint based view it is possible to achieve a better overall use of productive capacity. The demand-driven packet-switching network need not be restricted to physical inventory. It is also applicable to the services industry and to any business process that is part of a demand network. By bringing the overall measurement units down to $/time it no longer matters whether one is dealing with static products, dynamic intelligent products or services.

This chapter has attempted to define the role of several new concepts of interest in the rapidly changing “supply chain” field. The authors believe that changes in technology and ways of thinking provide the opportunity to develop a new theory of demand networks which can deal with dynamic information, intelligent products, services as well as physical products and locally intelligent agents. The packet switching view of products and services in the supply network provides a simple conceptual framework for visualizing the way this could operate. Further research in this area will involve investigation of possible industry partners and suitable industries to develop the concept further as well as the development of a simulation environment to investigate the economic effect of intelligent products and dynamic information.

7 References

Ahn HJ, Lee H (2004) An Agent-Based Dynamic Information Network for Supply Chain Management BT Technology Journal, 22(2): 18 – 27.

Almirall E, Brito I, Silisque A, Cortés U (2003) From Supply Chains to Demand Networks: The Electrical Bazaar-Agents in Retailing, http://www.minds-on-fire.com/zupc/publ/AiRCaepia2003.pdf

Andrews J, Benisch M, Sardinha A., Sadeh, N (2007) What Differentiates a Winning Agent: An Information Gain Based Analysis of TAC-SCM. AAAI-07 Workshop on Trading Agent Design and Analysis (TADA'07*)*, Vancouver, Canada. Arunachalam R, Sadeh N (2005) The supply chain trading agent competition. Electron. Commerce Res. Appl., 4(1).

Asif Z, Mandiwalla M 2005 Integrating the Supply Chain with RFID: A Technical and Business Analysis, Communications of the Association for Information Systems, 15:393-427

Bardaki C, Pramatar K, Doudakis G I 2007 RFID-Enabled Supply Chain Collaboration Services in a Networked Retail Business Environment, 20th Bled eConference eMergence: Merging and Emerging Technologies, Processes and Institutions, Slovenia.

Cao Q, Leggio, K B 2008, Alleviating the bullwhip effect in supply chain management using the multi-agent approach: an empirical study, International Journal of Computer Applications in Technology, 31(3-4): 225-237.

Christopher M 2000 The Agile Supply Chain: Competing in Volatile Markets, Industrial Marketing Management , 29(1)

Christopher M, Towill D 2002 Developing Market Specific Supply Chain Strategies, International Journal of Logistics Management , 13(1), 2002.

Culler DE Mulder H 2004, Smart Sensors to Network the World, Scientific American, 290(6): 85-93.

Economist Intelligence Unit 2006 Foresight 2020: Economic, industry and corporate trends", available from
http://www.eiu.com/site_info.asp?info_name=eiu_Cisco_Foresight_2020&rf=0

Finnie G, Barker JR Sun Z, 2004. A Multi-agent Model for Cooperation and Negotiation in Supply Networks, Americas Conference on Information Systems, New York, USA.

Fox MS, Barbuceanu M, Teigen R 2000 Agent-Oriented Supply-Chain Management. The International Journal of Flexible Manufacturing Systems 12: 165-188.

Hanebeck C 2006, Managing Data from RFID & Sensor-based Networks: Implications and Considerations for Data Management Challenges available at http://www.globeranger.com/pdfs/futureoftheedge/GlobeRangerRFIDData.pdf

Hanebeck HL and Raisinghani MS 2007 Delivering on the Promise of Auto-ID through Intelligent Agent Technologies, Int J. Innovation and Learning, 4(4): 411-424.

Haouzi HE , Petin J_F and Thomas A 2009 Design and Validation of a Product-Driven Control Systems Based on a Six Sigma Methodology and Discrete Event Simulation Production Planning and Control, 20:142-156.

Hoekstra S, Romme J 1992. Integrated Logistics Structures: Developing Customer Oriented Goods Flow, McGraw-Hill, London.

Karkkainen M, Holmstrom J, Framling K, Artto K 2003, Intelligent products: a step towards a more effective project delivery chain, Computers in Industry, 50(2): 141-151

Kim JB , Segev A 2003 Multi-component contingent auction (MCCA): a procurement mechanism for dynamic formation of supply networks, Proceedings of the 5th international conference on Electronic commerce, ACM: 78-86.

Leitao P, Restivo F 2006, ADACOR: A Holonic Architecture for Agile and Adaptive Manufacturing Control, Computers in Industry, 5:121-130.

Luh PB, Ni M, Chen H., Thakur LS 2003. Price-Based Approach for Activity Coordination in a Supply Network IEEE Transactions on Robotics and Automation, Volume 19 (2): 335 – 346.

Leach PT 2004. Inventory in Motion. Journal of Commerce, October 25, p. 29

Mooney JG, Gurbaxani V, Kraemer KL 1996 A process oriented framework for assessing the business value of information technology ACM SIGMIS Database archive, 27(2): 68 – 81.

Monteiro T, Roy D, Anciaux D 2007, Multi-site coordination using a multi-agent system, Computers in Industry, 58(4), 367-377.

Morel G, Panetto H, Zaremba M, Mayer F 2003 Manufacturing enterprise control and management system engineering: rationales and open issues , IFAC Annual Reviews in Control, 27-2

Moore JF 1993, "Predators and Prey: A New Ecology of Competition", Harvard Business Review, 71(3): 75-86.

Niederman F, Mathieu RG, Morley R, Kwon I-W 2007 Examining RFID applications in supply chain management, Communications of the ACM, 50(7), 92 - 101

Nissen ME 2001 Agent-Based Supply Chain Integration, Information Technology and Management, 2(3):289 – 312.

Olhager J 2003 "Strategic Positioning of the Order Penetration Point", International Journal of Production Economics, V85:319 – 329.

Pannequin R, Morel G, Thomas A 2009 The Performance of Product-Driven Manufacturing Control: An Emulation-Based Benchmarking Study, Computers in Industry, 60.

Rudberg M and Wikner J 2004 Mass Customization in terms of the Customer Order Decoupling Point, Production Planning & Control, 15(4): 445 – 458.

Sadeh-Koniecpol ND, Hildum J ,Kjenstad H 2003 MASCOT: An Agent-Based Architecture for Dynamic Supply Chain Creation and Coordination in the Internet Economy, Production Planning & Control 12(3).

Schuster E, Brock DL 2004 Creating an Intelligent Infrastructure for ERP: The Role of Auto-ID Technology. This is a working paper for APICS.

Schuster EW, Allen SJ, Brock DL 2007. Global RFID: The Value of the EPCglobal Network for Supply Chain Management, Springer-Verlag, New York

Sharman G (1984) The Rediscovery of Logistics. Harvard Business Review 62:71 – 80.

Shingo S (1981). Study of Toyota Production System from Industrial Engineering Viewpoint, Japan Management Association, Tokyo.

Silisque A, Brito I, Almirall E, Cortés U (2003) From Supply Chains to Demand Networks. Agents in Retailing. The Electrical Bazaar Artificial Intelligence Research Report, LSI-03-41-R

Supply Chain Management Terms and Glossary (2009), Council of Supply Chain Management Professionals, http://cscmp.org/digital/glossary/glossary.asp

Tellkamp C (2006) The impact of auto-ID technology on process performance: RFID in the FMCG supply chain, Doctoral Thesis, Universitat St. Gallen.

Watson RT (editor), Information Systems. University of Georgia, 2007, http://globaltext.terry.uga.edu/books

Weeks D, Crawford FA (1994) Efficient consumer response: a mandate for food manufacturers? Food Processing, 55(2):34.

Wikner J, Rudberg M (2005) Integrating Production and Engineering Perspectives on the Customer Order Decoupling Point *International Journal of Operations & Production Management* 25(7):623 – 641

Wong CY, McFarlane D, Ahmad Zaharudin A, Agarwal A (2002) The intelligent product driven supply chain, IEEE International Conference on Systems, Man and Cybernetics.