Spreadsheets in Education (eJSiE)

Volume 3 | Issue 3 Article 6

3-28-2010

A Spreadsheet Illustration of the Transient Stability Analysis of Power Systems

Mark A. Lau
Universidad del Turabo, mlau@suagm.edu

Sastry P. Kuruganty
Universidad del Turabo, ut_skurugant@suagm.edu

Follow this and additional works at: http://epublications.bond.edu.au/ejsie

Recommended Citation
Lau, Mark A. and Kuruganty, Sastry P. (2010) "A Spreadsheet Illustration of the Transient Stability Analysis of Power Systems," *Spreadsheets in Education (eJSiE)*: Vol. 3: Iss. 3, Article 6.
Available at: http://epublications.bond.edu.au/ejsie/vol3/iss3/6

This Regular Article is brought to you by the Faculty of Business at ePublications@bond. It has been accepted for inclusion in Spreadsheets in Education (eJSiE) by an authorized administrator of ePublications@bond. For more information, please contact Bond University's Repository Coordinator.

A Spreadsheet Illustration of the Transient Stability Analysis of Power Systems

Abstract
This paper presents a simple, yet powerful approach to introducing the topic of transient stability in a power system course. The problem of transient stability is of fundamental importance in the analysis and design of power systems. The solution to this problem couples numerical methods for solving power flows with those for solving the differential equations that describe the behavior of synchronous machines.

Transient stability is very rich in technical and mathematical content. As such it is a challenging topic for students to grasp and for instructors to present. This paper uses spreadsheets to implement the step-by-step procedure that is typical in a transient stability study. Unlike commercially available power system software, spreadsheets expose the solution steps with clarity without obscuring the inner workings of the numerical methods employed.

Keywords
Transient stability, power systems, modified Euler method.

Cover Page Footnote
The authors gratefully acknowledge support from the Universidad del Turabo.

This regular article is available in Spreadsheets in Education (eJSiE): http://epublications.bond.edu.au/ejsie/vol3/iss3/6

1. Introduction

Stability is a major concern in the planning and operation of power systems. Network disturbances such as a short circuit in a transmission line, sudden loss of generation, or the loss of a large load may cause instability; if such disturbances are not cleared away rapidly, instability may ultimately lead to power failure, along with the economic losses associated with the occurrence of such events. *Transient stability* is defined as the ability of the power system to maintain synchronism when subjected to a severe transient disturbance, such as the ones mentioned previously. When subjected to severe disturbances, the system exhibits large excursions of generator rotor angles, bus voltages, power flows, among other system variables. The system is said to be stable if it is able to maintain synchronism once the disturbance is cleared and operates at a new quiescent point.

The analysis of transient stability in large power systems is complex, thus requiring the use of computers. Commercial software for analyzing power systems is available, e.g., PowerWorld, electromagnetic transients program (EMTP), MATLAB's power system toolbox, among others. These computer programs are highly sophisticated and require training for their proper use. However, the richness of the numerical methods that are packed with commercial software oftentimes gets unnoticed by the untrained user.

This paper presents a simple, yet powerful approach to introducing the topic of transient stability in a power system course. In an introductory power course it is more desirable to instill in students a better appreciation for the methods used in transient stability analysis, rather than to demand expeditious solutions rendered by commercial programs. A stronger emphasis on fundamentals can endow students with sharper critical thinking skills to judge results generated by specific-purpose software.

In this paper, the transient stability analysis of small power systems is implemented using spreadsheets. Spreadsheets are widely available and do not require significant programming; spreadsheets offer a convenient environment for tracking convergence of solutions and exploring what-if questions for sensitivity analysis. Spreadsheets lend themselves to a very transparent implementation of the step-by-step procedures encountered in transient stability analysis, without obscuring the inner workings of the numerical methods employed in such studies.

The disturbances considered in this paper are three-phase short circuits. These faults are the most severe type, as they cause maximum acceleration of the connected machines. The presentation will follow those of most textbooks [2 – 5]; equations will be presented without derivations as they can be found in standard reference books [2 – 5]. The emphasis will be placed on the construction of spreadsheet models. Uses of spreadsheets in power system analysis have been reported in the literature [1, 6, 7]. It is along this line that this paper is presented, continuing the efforts initiated by the authors in a power systems course [6].

This paper is organized as follows. Section 2 presents the governing equations for transient stability analysis of a single-machine system, and includes the corresponding spreadsheet implementation. Section 3 suggests possible adaptations of the spreadsheet developed in Section 2 to the stability analysis of a special case of two-machine systems. Section 4 discusses the pedagogical advantages of the spreadsheet approach. Finally, Section 5 gives concluding remarks.

2. Transient stability in a single-machine system

2.1 The swing equation

The transient stability analysis begins with the formulation of the governing equation that describes the dynamic behavior of a synchronous machine. This equation is referred to as *swing equation*, which in a per unit (p.u.) system may be written as [4]

$$\frac{2H}{\omega_{\text{syn}}}\omega_{\text{p.u.}}(t)\frac{d^2\delta(t)}{dt^2} = p_{m\text{p.u.}}(t) - p_{e\text{p.u.}}(t) \tag{1}$$

where

$$\begin{aligned}
\delta &= \text{power angle in radians,}\\
\omega_{\text{p.u.}} &= \text{angular speed of the rotor in p.u.,}\\
t &= \text{time in seconds,}\\
\omega_{\text{syn}} &= \text{synchronous angular speed in rad/s}\\
H &= \text{machine inertia constant in seconds,}\\
p_{m\text{p.u.}} &= \text{mechanical power in p.u.,}\\
p_{e\text{p.u.}} &= \text{electrical power in p.u.}
\end{aligned}$$

In the per-unit swing equation of (1), $\omega_{\text{syn}} = 2\pi f$ with f being the rated frequency in hertz, $p_{m\text{p.u.}}$ is the p.u. mechanical power supplied by the prime

mover minus mechanical losses, and $p_{e\text{p.u.}}$ is the p.u. electrical power output of the generator plus electrical losses.

The electrical power, p_e, delivered by the generator to an infinite bus (see Figure 1) can be found from [4]

$$p_e = \frac{E' V_{\text{bus}}}{X_{\text{eq}}} \sin\delta \tag{2}$$

where E' is the internal generator voltage behind the transient reactance X'_d, X_{eq} is the equivalent reactance between the generator internal voltage and the infinite bus, V_{bus} is the voltage of the infinite bus system, and δ is the power angle with respect to the infinite bus – the latter typically taken to be 0°. If all these quantities (except δ) are expressed in p.u. then Equation (2) will yield $p_{e\text{p.u.}}$

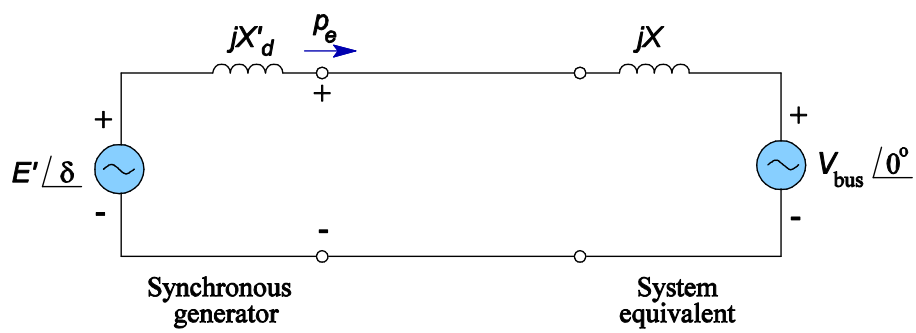

Figure 1: Synchronous generator connected to an infinite bus.

Although the transient stability of a single-machine, infinite-bus system can be best analyzed by way of the so called *equal area criterion*, the paper will concentrate on numerical methods for solving the differential equation in (1). For additional information on the equal area criterion, the interested reader may consult any of the standard references [2 – 5].

Since the swing equation is a second-order differential equation, it is more convenient to rewrite it as a set of two first-order differential equations [4]

$$\frac{d\delta(t)}{dt} = \omega(t) - \omega_{\text{syn}}, \tag{3}$$

$$\frac{d\omega(t)}{dt} = \frac{(p_{m\text{p.u.}}(t) - p_{e\text{p.u.}}(t))\omega_{\text{syn}}}{2H\omega_{\text{p.u.}}(t)}. \tag{4}$$

2.2 The modified Euler method

The modified Euler method is a well known numerical technique for solving differential equations. To apply the method to the system of equations in (3) – (4), a time interval of interest is chosen, say $[t_0,\ t_0 + T]$ $(T > 0)$, over which the solution is to be approximated. The time interval is then divided so as to obtain a set discrete times of the form

$$t_k = t_0 + hk \quad \left(k = 0, 1, 2, \ldots, \left\lceil \frac{T}{h} \right\rceil\right),$$

where $h = t_{k+1} - t_k$ denotes the time increment (step size).

The Euler equations for the swing equation at time t_k are then given by [4]

$$\tilde{\delta}_k = \delta_k + \left(\frac{d\delta}{dt}\right)_k h, \tag{5}$$

$$\tilde{\omega}_k = \omega_k + \left(\frac{d\omega}{dt}\right)_k h, \tag{6}$$

$$\left(\frac{d\tilde{\delta}}{dt}\right)_k = \tilde{\omega}_k - \omega_{\text{syn}}, \tag{7}$$

$$\left(\frac{d\tilde{\omega}}{dt}\right)_k = \frac{(\tilde{p}_{m\text{p.u.}_k} - \tilde{p}_{e\text{p.u.}_k})\omega_{\text{syn}}}{2H\tilde{\omega}_{\text{p.u.}_k}}, \tag{8}$$

$$\delta_{k+1} = \delta_k + \frac{\left(\frac{d\delta}{dt}\right)_k + \left(\frac{d\tilde{\delta}}{dt}\right)_k}{2} h, \tag{9}$$

$$\omega_{k+1} = \omega_k + \frac{\left(\frac{d\omega}{dt}\right)_k + \left(\frac{d\tilde{\omega}}{dt}\right)_k}{2} h. \tag{10}$$

In a typical transient stability study, $t_0 = 0$ and $T = 1$ s. The method will be applied to assess the stability of a single-machine, infinite bus system whose line diagram is depicted in Figure 2.

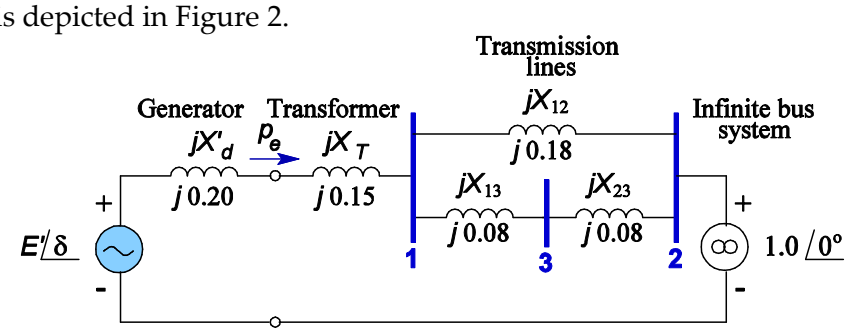

Figure 2: One-line diagram of a synchronous generator connected to a system.

The example is based on a system discussed in [4]. In Figure 2, the machine is a three-phase, 60 Hz synchronous generator, connected through a transformer and transmission lines to an infinite bus system. All reactances are indicated in the figure and given in per unit of a common base. The machine inertia constant is H = 2.5 p.u.-s. To perform power flow calculations, it is assumed that the infinite bus receives 1.0 p.u. at 0.9 (cosφ) lagging power factor (p.f.).

The equivalent reactance between the generator internal voltage and the infinite bus is

$$\begin{aligned} X_{\text{eq}} &= X'_d + X_T + X_{12} \| (X_{13} + X_{23}) \\ &= 0.20 + 0.15 + 0.18 \| (0.08 + 0.08) \\ &= 0.4347. \end{aligned}$$

The current into the infinite bus is given by

$$I = \frac{P}{V_{\text{bus}} \cos\varphi} e^{-j \cos^{-1} \varphi} = \frac{1.0}{(1.0)(0.9)} e^{-j \cos^{-1} 0.9} = 1.1111 e^{-j25.842^\circ}.$$

Therefore, the machine internal voltage is

$$\begin{aligned} E' e^{j\delta} &= V_{\text{bus}} + jX_{\text{eq}} I \\ &= 1.0 + j0.4347(1.1111 e^{-j25.842^\circ}) \\ &= 1.2862 e^{j19.753^\circ}. \end{aligned}$$

The electrical power p_{e1} delivered by the generator to the infinite bus system is obtained from Equation (2)

$$p_{e1} = \frac{(1.2862)(1.0)}{0.4347} \sin\delta = 2.9588 \sin\delta.$$

It is assumed now that at some arbitrary time, say $t_0 = 0$, a three-phase-to-ground short circuit occurs on line 1–3 at bus 3. The fault is subsequently cleared by opening circuit breakers located at the ends of lines 1–3 and 2–3. The faulted network is depicted in Figure 3(a). To compute the electrical power p_{e2} delivered by the generator during the fault, it is convenient to find the Thévenin equivalent of the faulted network (see Figure 3(b)), as viewed from the generator internal voltage source. During the fault,

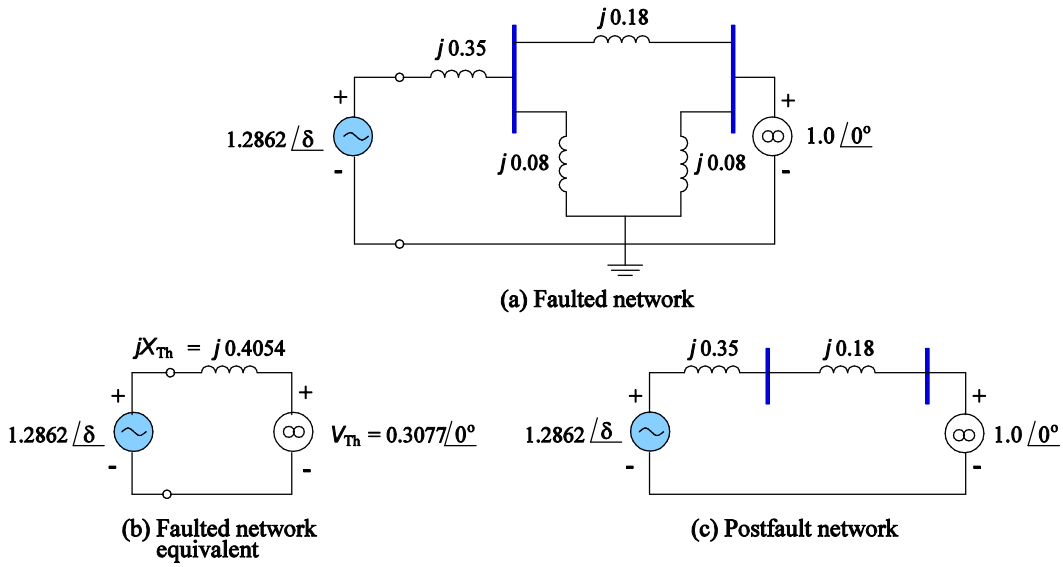

Figure 3: Circuit diagrams for stability analysis: (a) faulted network; (b) Thévenin equivalent of faulted network; and (c) post-fault network, with transmission lines 1–3 and 2–3 removed from the system.

$$\begin{aligned} X_{\text{Th}} &= X'_d + X_T + X_{12} \| X_{13} \\ &= 0.20 + 0.15 + 0.18 \| 0.08 \\ &= 0.4054 \text{ p. u.} \end{aligned}$$

and

$$V_{\text{Th}} = V_{\text{bus}} \left(\frac{X_{13}}{X_{12} + X_{13}} \right) = 1.0 e^{j0^\circ} \left(\frac{0.08}{0.18 + 0.08} \right) = 0.3077 e^{j0^\circ} \text{ p. u.}$$

Substituting X_{Th} and V_{Th} in Equation (2) yields

$$p_{e2} = \frac{(1.2862)(0.3077)}{0.4054} \sin\delta = 0.9763 \sin\delta.$$

The fault is subsequently cleared resulting in the removal of transmission lines 1–3 and 2–3, as depicted by the post-fault network in Figure 3(c). Finally, the electrical power p_{e3} delivered by the generator after the fault is cleared, is once again obtained from Equation (2) under post-fault conditions

$$p_{e3} = \frac{(1.2862)(1.0)}{0.53} \sin\delta = 2.4268 \sin\delta.$$

This concludes the preliminary power flow calculations for pre-, during-, and post-fault operating conditions. The next step in the transient stability analysis is to implement the modified Euler method, as given by Equations (3)–(10).

2.3 Spreadsheet implementation of the single-machine, infinite-bus system

In this section the modified Euler method is implemented via spreadsheets. The spreadsheet contains three sections: (i) input section; (ii) calculations section; and (iii) graphical section.

The input section of the spreadsheet is shown in Figure 4. The input section spans the cell range A1:F11. It displays preliminary calculations such as power flows (red fonts) and other parameters such as clearance time and step size (blue fonts) that can be modified by the user. The goal of the transient stability analysis is to determine the *critical clearance time*, t_{cr}, the maximum time a system may be subjected to a sustained fault before it is cleared away without incurring instability. In other words, the clearance time in cell D10 may be modified (provided all other parameters remain unchanged) until one can discern whether stability is maintained or lost after fault clearance.

	A	B	C	D	E	F	G	H
1	**Transient Stability Example**							
2	Mechanical power (p_m) =			1	p.u.	% From power flow calculations		
3	Pre-fault maximum power (p_1max) =			2.9588	p.u.	% From power flow calculations		
4	During fault maximum power (p_2max) =			0.9763	p.u.	% From power flow calculations		
5	Post-fault maximum power (p_3max) =			2.4268	p.u.	% From power flow calculations		
6	Initial (pre-fault) power angle (delta_0) =			0.3448	rad	% From power flow calculations		
7	Frequency (f) =			60	Hz	% Frequency may be changed		
8	Synchronous speed (omega_s) =			376.9911	rad/s	% omega_s = 2*pi*f		
9	Machine inertia constant (H) =			2.5	p.u.-s	% Inertia constant may be changed		
10	Clearance time (t_cl) =			0.34	s	% Fault clearance time may be changed		
11	Step size (Delta t) =			0.01	s	% Time step for numerical method may be changed		

Figure 4: Input section of spreadsheet for transient stability analysis.

The calculations section of the spreadsheet is illustrated in Figure 5. The calculations span the cell range A13:I114. Some of the rows in the table were hidden to make the figure more manageable. Cell range A13:I13 simply contains labels to identify the quantities to be computed. Cell range A14:I14 contains initial conditions and other calculations at time $t_0 = 0$, the instant at which the fault occurs.

	A	B	C	D	E	F	G	H	I
13	Time (s)	Delta (rad)	Omega (rad/s)	d/dt delta	d/dt omega	delta~	omega~	d/dt delta~	d/dt omega~
14	0.00	0.3448	376.9911	0.0000	50.5208	0.3448	377.4963	0.5052	50.4532
16	0.02	0.3548	377.9967	1.0056	49.6906	0.3649	378.4936	1.5025	48.9353
18	0.04	0.3848	378.9721	1.9809	47.5169	0.4046	379.4472	2.4561	46.1201
20	0.06	0.4338	379.8914	2.9003	44.1203	0.4628	380.3326	3.3415	42.1622
22	0.08	0.5004	380.7320	3.7409	39.6878	0.5378	381.1289	4.1378	37.2817
24	0.10	0.5829	381.4756	4.4845	34.4691	0.6278	381.8203	4.8292	31.7582
34	0.20	1.1569	383.5220	6.5309	7.8702	1.2222	383.6007	6.6096	6.1109
44	0.30	1.8300	383.8592	6.8681	4.1735	1.8987	383.9009	6.9098	5.6093
48	0.34	2.1097	384.1651	7.1740	-80.1225	2.1814	383.3639	6.3727	-73.2737
49	0.35	2.1774	383.3981	6.4070	-73.6792	2.2415	382.6613	5.6702	-66.9371
54	0.40	2.4181	380.4693	3.4782	-45.3137	2.4529	380.0162	3.0250	-40.5638
64	0.50	2.5991	377.5735	0.5824	-19.0406	2.6049	377.3831	0.3920	-18.1369
74	0.60	2.5656	375.6520	-1.3391	-24.3466	2.5522	375.4086	-1.5826	-26.4170
84	0.70	2.2595	371.4906	-5.5005	-66.8555	2.2044	370.8220	-6.1691	-73.2582
94	0.80	1.2682	361.8951	-15.0960	-103.4075	1.1172	360.8611	-16.1301	-93.0614
104	0.90	-0.4250	363.0159	-13.9752	156.6576	-0.5648	364.5825	-12.4086	179.2348
114	1.00	-0.8210	383.8039	6.8128	205.5885	-0.7528	385.8598	8.8687	195.8956

Figure 5: Section of the spreadsheet that implements the modified Euler method. The row corresponding to clearance time $t_{\mathrm{cl}} = 0.34$ s (row 48 in this spreadsheet) has been highlighted for clarity.

Cell range A15:I15 of the spreadsheet (not shown in Figure 5) implements the modified Euler method (Equations (3)–(10)) and constitutes the first complete iteration of the method. The rest of the rows are replicas of the cell range A15:I15, which are generated by the powerful Copy command of the spreadsheet.

It is pointed out that throughout the analysis the mechanical power, p_m, is assumed to be constant and equal to 1.0 p.u. Prior to the fault ($t < t_0$) the generator was delivering electrical power p_{e1}; when the fault occurs (at $t_0 = 0$) the electrical power is p_{e2}; and, finally, when the fault is cleared at time $t = t_{\mathrm{cl}}$, the electrical power is p_{e3}. To account for changing conditions, conditional IF statements are programmed in the spreadsheet so that the value of p_{e2} is used for the time interval $0 < t < t_{\mathrm{cl}}$, and the value of p_{e3} for $t > t_{\mathrm{cl}}$.

To make the determination of the critical clearance time (t_{cr}) more interactive, a scroll bar may be inserted in the spreadsheet. The scroll bar may be found under the Developer menu of Microsoft Excel. The scroll bar may be placed in the spreadsheet by following the sequence Developer > Insert ActiveX Controls > Scroll Bar. Working in Design Mode, the scroll bar settings can be modified by right-clicking on the scroll bar and selecting Properties from the drop-down menu; and then editing the fields Min to set the minimum value to 0, Max to set the maximum value to 100, and LinkedCell to K10. The actual clearance time (t_{cl}) in cell D10 simply scales the content of cell K10 by a factor of 1/100. The scaling

factor circumvents the restriction on integer-only incremental change allowed by the scroll bar settings.

To exploit the graphical capabilities of Microsoft Excel, a graph displaying the time history of the generator rotor angle may be incorporated into the spreadsheet. This offers a very convenient user interface. For instance, the user may slide the control within the scroll bar to adjust the clearance time and simultaneously observe the effect on system stability from the graph. The scroll bar and the graph constitute the graphical section of the spreadsheet, a sample of which is shown in Figure 6.

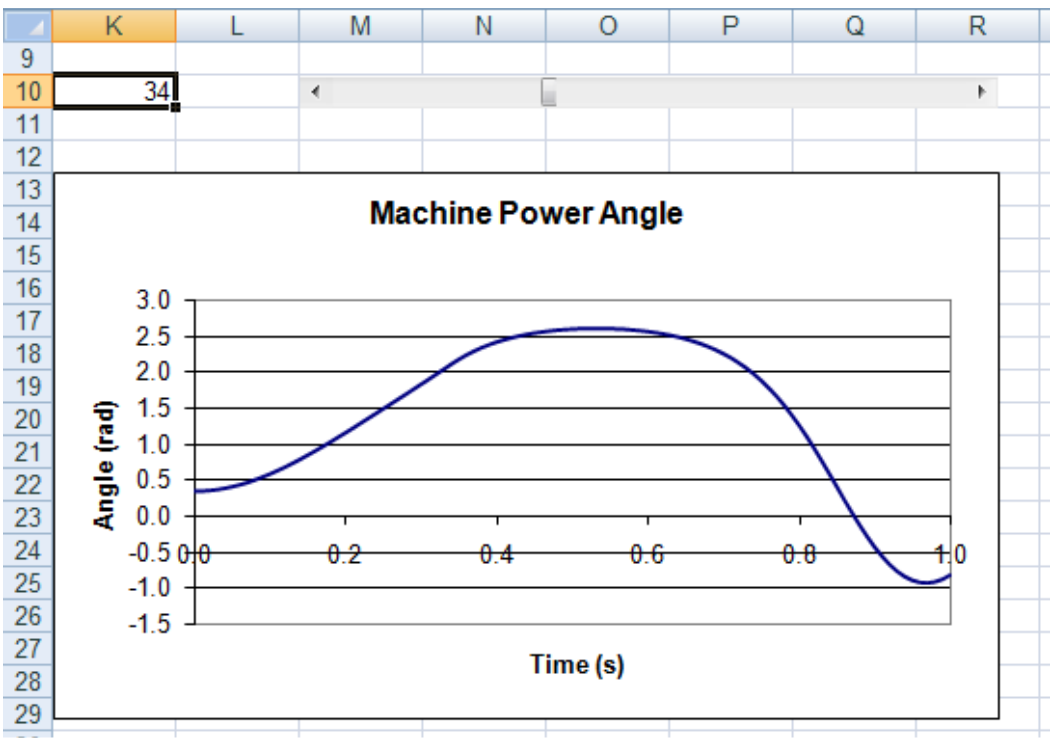

Figure 6: Generator power angle for critical clearance time $t_{\mathrm{cr}} = 0.34$ s. The top portion of the figure displays the scroll bar, which is linked to cell K10.

The generator power angle shown in Figure 6 corresponds to a clearance time $t_{\mathrm{cl}} = 0.34$ s. Since this is the maximum time the system can operate with a sustained fault before being cleared, it can be inferred that the critical clearance time is $t_{\mathrm{cr}} = 0.34$ s. Any clearance time below t_{cr} will show time histories

qualitatively similar to that in Figure 6, that is, the machine is able to oscillate and eventually attain synchronism under new operating conditions.

To demonstrate that $t_{\mathrm{cr}} = 0.34$ s is a reasonable approximation to the critical clearance time, the user may attempt to slide the control in the scroll bar to set the value in cell K10 to, say 35. This in turn implies that the clearance time in cell D10 will be 0.35 (scales the value in cell K10 by a factor of 1/100). The effect of having a clearance time $t_{\mathrm{cl}} = 0.35$ s ($> t_{\mathrm{cr}}$) is illustrated in Figure 7. From the figure, it is obvious that for this clearance time the system will be unstable, as the generator rotor angle incurs large excursions without being able to produce oscillations that can steer the system to a new quiescent operating point.

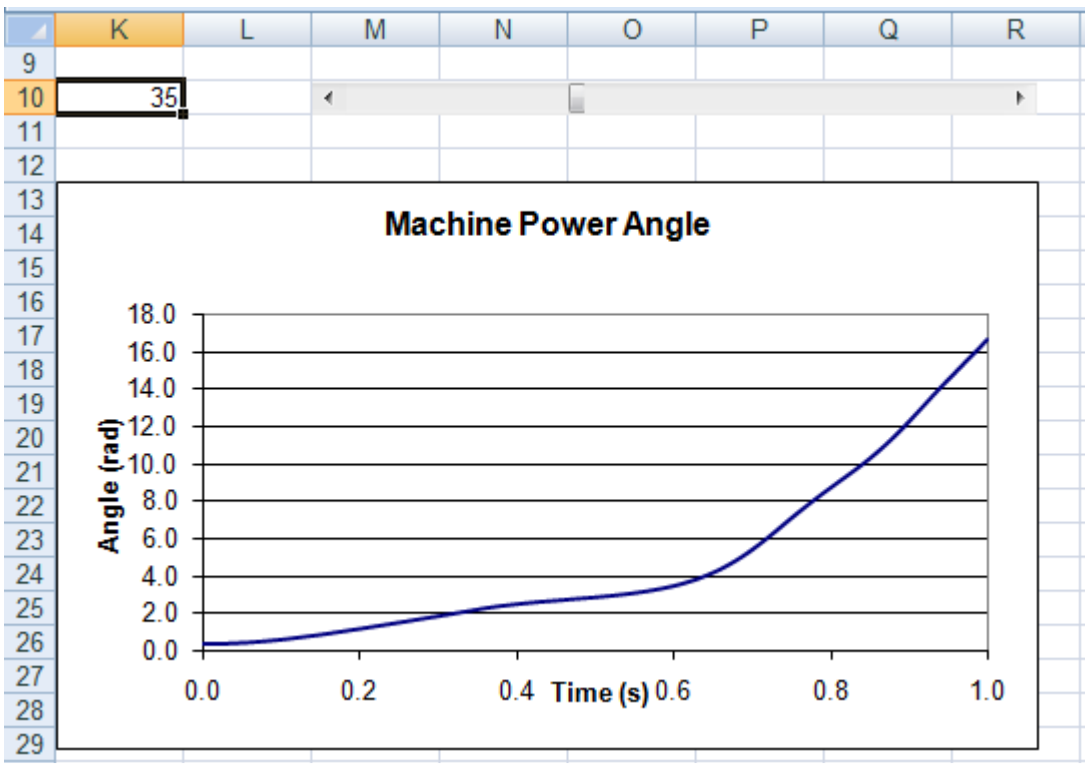

Figure 7: Generator power angle for clearance time $t_{\mathrm{cl}} = 0.35$ s $> t_{\mathrm{cr}}$, where $t_{\mathrm{cr}} = 0.34$ s. The graph clearly shows that this particular clearance time leads to system instability.

The contents of cells A14 through I15, along with a brief description of the corresponding Microsoft Excel formulas, are summarized in Table 1.

Table 1: Microsoft Excel formulas for the modified Euler method.

Cell	Excel formula	Description
A14	0	Initial time t_0. This is the instant at which the fault occurs; normally t_0 is set to zero.
B14	=D6	Copy the initial (pre-fault) power angle δ from cell D6.
C14	=D8	Copy the initial (pre-fault) generator (synchronous) speed ω from cell D8.
D14	=C14-$D$8	Generator relative speed at time step k, $\left(\frac{d\delta}{dt}\right)_k$, given by Equation (3).
E14	=IF(A14>=$D$10,($D$2-$D$5*SIN(B14))*$D$8^2/(2*$D$9*C14),($D$2-$D$4*SIN(B14))*$D$8^2/(2*$D$9*C14))	Generator acceleration at time step k, $\left(\frac{d\omega}{dt}\right)_k$, given by Equation (4). The conditional IF is used to check whether the fault has been cleared or not so that the correct value of p_{e2} or p_{e3} is substituted in Equation (4).
F14	=B14+D14*$D$11	Intermediate value of power angle at time step k, $\tilde{\delta}_k$, given by Equation (5).
G14	=C14+E14*$D$11	Intermediate value of generator relative speed at time step k, $\tilde{\omega}_k$, given by Equation (6).
H14	=G14-$D$8	Slope correction for generator relative speed at time step k, $\left(\frac{d\tilde{\delta}}{dt}\right)_k$, given by Equation (7).
I14	=IF(A14>=$D$10,($D$2-$D$5*SIN(F14))*$D$8^2/(2*$D$9*G14),($D$2-$D$4*SIN(F14))*$D$8^2/(2*$D$9*G14))	Slope correction for generator acceleration at time step k, $\left(\frac{d\tilde{\omega}}{dt}\right)_k$, given by Equation (8). The conditional IF is used to check whether the fault has been cleared or not so that the correct value of p_{e2} or p_{e3} is substituted in Equation (8).

Table 1 (*continued*): Microsoft Excel formulas for the modified Euler method.

Cell	Excel formula	Description
A15	=A14+$D$11	Updated value of time for current iteration. The time resolution is determined by the step size in cell D11.
B15	=B14+((D14+H14)/2)*$D$11	Updated power angle δ computed from Equation (9).
C15	=C14+((E14+I14)/2)*$D$11	Updated generator relative speed ω computed from Equation (10).
D15:I15	Various	Copies of formulas in cell range D14:I14.
A16:I114	Various	Copies of formulas in cell range A15:I15.

In summary, the proposed spreadsheet allows the user to assess the stability of a single-machine, infinite-bus system. The critical clearance time can be determined by manually adjusting the slide control of a scroll bar. The effect of different values of clearance times on system stability may be observed instantly in a graph. Moreover, the spreadsheet is capable of handling other parameter variations, e.g. transmission line parameters, thereby allowing the user to explore system robustness or conduct sensitivity analysis.

3. Transient stability in a two-machine system

Real power systems contain multiple machines interconnected through a grid. In practice, the stability analysis of large-scale systems is performed with specialized software. Although the transient stability analysis of multi-machine systems is beyond the scope of this paper, in this section an alternative swing equation is provided whereby the spreadsheet introduced in Section 2.3 may still be employed.

To be more specific, it is assumed that two machines 1 and 2 operating within the same power plant are connected to a common bus. The two machines may be combined into a single dynamically equivalent machine with corresponding swing equation [5]

$$\frac{2H_{12}}{\omega_{\text{syn}}}\frac{d^2\delta_{12}(t)}{dt^2} = P_{m12}(t) - P_{e12}(t) \tag{11}$$

where the relative angle δ_{12} equals $\delta_1 - \delta_2$, and the equivalent inertia constant H_{12} and weighted mechanical and electrical powers P_{m12} and P_{e12} are given by

$$H_{12} = \frac{H_1 H_2}{H_1 + H_2}, \tag{12}$$

$$P_{m12} = \frac{P_{m1} H_2 - P_{m2} H_1}{H_1 + H_2}, \tag{13}$$

$$P_{e12} = \frac{P_{e1} H_2 - P_{e2} H_1}{H_1 + H_2}. \tag{14}$$

In Equations (12)–(14), H_1 and H_2 are the inertia constants, P_{m1} and P_{m2} are the mechanical powers, and P_{e1} and P_{e2} are the electrical powers of machines 1 and 2, respectively. In a transient stability analysis the relative angle δ_{12} is of interest; for the two-machine system to be stable, the relative angle must decrease after a fault is cleared. Incorporating all the changes indicated by Equations (12)–(14), the spreadsheet introduced in Section 2.3 may be used to solve the combined swing equation (11), except in this case the relative angle is of interest.

4. Pedagogical advantages of the spreadsheet approach

In light of the spreadsheet implementations presented in this paper, the following remarks could be made:

(i) Setting up spreadsheets demands precise attention to detail from the user. Incorrect use of the Copy command or improper referencing of cells will lead to erroneous results. Attention to detail is a desirable skill that students should hone. Spreadsheets offer an environment in which such skill can be honed; the use of highly specialized software without proper understanding of the underlying methods may at times impede development of the skill in the student.

(ii) Spreadsheets offer a reasonable compromise between the sophistication of specific-purpose software and programming. The amount of programming in a typical spreadsheet is minimal, often reduced to formula editing and copying. This approach allows students to concentrate on analysis and interpretation of results rather than on time-consuming code debugging.

(iii) The spreadsheet implementations mimic hand calculations. The notepad-like interface of spreadsheets allows the student to keep track of results and ascertain convergence. Because of the resemblance to hand calculations, the spreadsheet approach may provide the student with a deeper understanding of the numerical methods, which could be obscured if specific-purpose software is used without proper knowledge of such methods.

(iv) The spreadsheets implementations may be presented to students to introduce numerical methods for solving differential equations such as the swing equation. Students may be asked to adapt the spreadsheet presented in Section 2.3 to analyze the transient stability of other systems of complexity comparable to that of the system discussed in Section 2. The ambitious students may even improve upon the spreadsheet presented in this paper by macro programming or creative use of other Microsoft Excel functions.

(v) Possible ways in which the spreadsheet model may be used are: change the parameters of various transmission lines and assess the stability of the system; for a given line, explore the range of parameter values over which stability can be discerned one second after a three-phase fault occurs; compare oscillation curves (generator rotor angles) for systems operating at other frequencies (say, $f = 50$ Hz).

In fairness to specific-purpose software designed for power system analysis, it can be argued that such programs serve other purposeful needs, namely, handling large-scale systems and accommodating various types of faults. Problems of considerable size and high complexity may not be handled efficiently by spreadsheets.

5. Conclusions

This paper presented a spreadsheet implementation of the modified Euler method for analyzing the transient stability of a single-machine, infinite bus system. The spreadsheet model discussed in this paper gives students a greater insight into the formulation and analysis of the transient stability problem; in addition, the model helps students to adequately interpret numerical results generated by specific-purpose software. The spreadsheet approach is ideal if the

emphasis is on understanding of numerical techniques. Spreadsheets may be considered as a viable alternative to enhancing education in other subjects and engineering fields.

The interested reader may obtain a copy of the Microsoft Excel file for transient stability analysis by sending an e-mail to mlau@suagm.edu.

References

[1] Acarnley, P. A power system load flow analysis using an Excel workbook. Online available: http://www.engsc.ac.uk/downloads/awards/load.pdf. Accessed: December 19, 2009.

[2] Bergen, A. R. and Vittal, V. *Power systems analysis*, 2nd edition, Prentice Hall, 1999.

[3] El-Hawary, M. E. *Electrical power systems: design and analysis*, IEEE Press, Reston Publishing Company, 1983.

[4] Glover, J. D. and Sarma, M. S. *Power system analysis and design*, 3rd edition. Thomson-Engineering, 2001.

[5] Grainger, J. and Stevenson, W. D. *Power systems analysis*, McGraw-Hill Publishing Co, 1994.

[6] Lau, M. A. and Kuruganty, S. P. Spreadsheet implementations for solving power-flow problems, *eJournal of Spreadsheets in Education*, 3(1): 27-45, August 2008. Online: http://epublications.bond.edu.au/ejsie/vol3/iss1/3.

[7] Rao, N. D. and Haddad, N. Y Typical applications of new generation spreadsheets to power system problems, *Proceedings of the 33rd Midwest Symposium on Circuits and Systems*, Vol. 1, 159-162, August 12-14, 1990.